Positions	A ±0.25 (0.010)	B ±0.13 (0.005)	C ±0.38 (0.015)	D ±0.25 (0.010)	E ±0.25 (0.010)
15	16.92 0.666	24.99 0.984	30.81 1.213	19.28 0.759	16.33 0.643

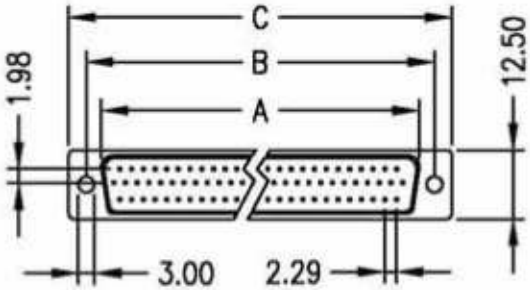

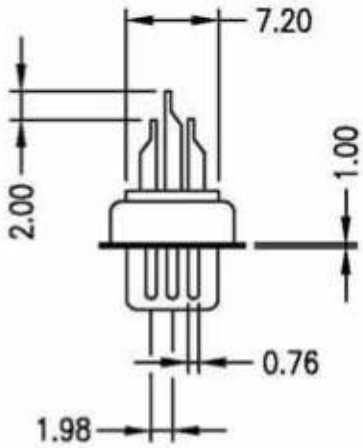

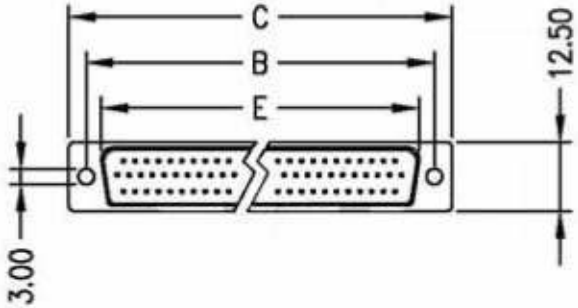

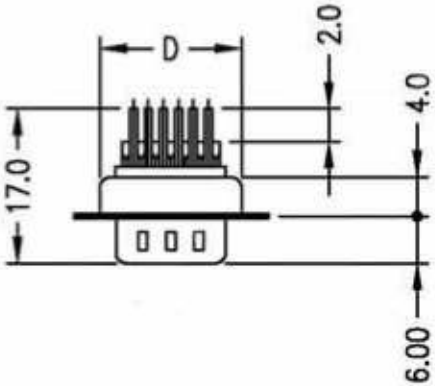

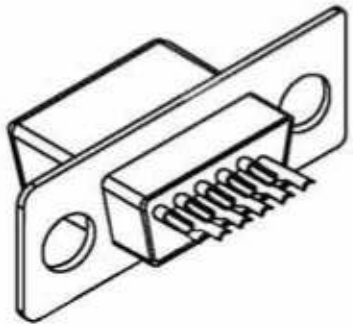

SPECIFICATIONS

Insulator :PBT+30% glass fiber , UL 94V-0
Contact : Brass or Phosphor bronze
Current rating (Max) : 3 amp AC / DC
Withstanding voltage : 1000 VAC
Insulation resistance (Min.):1000MΩ
Contact resistance (Max):30MΩ
Operating temperature : -55°C~+105°C