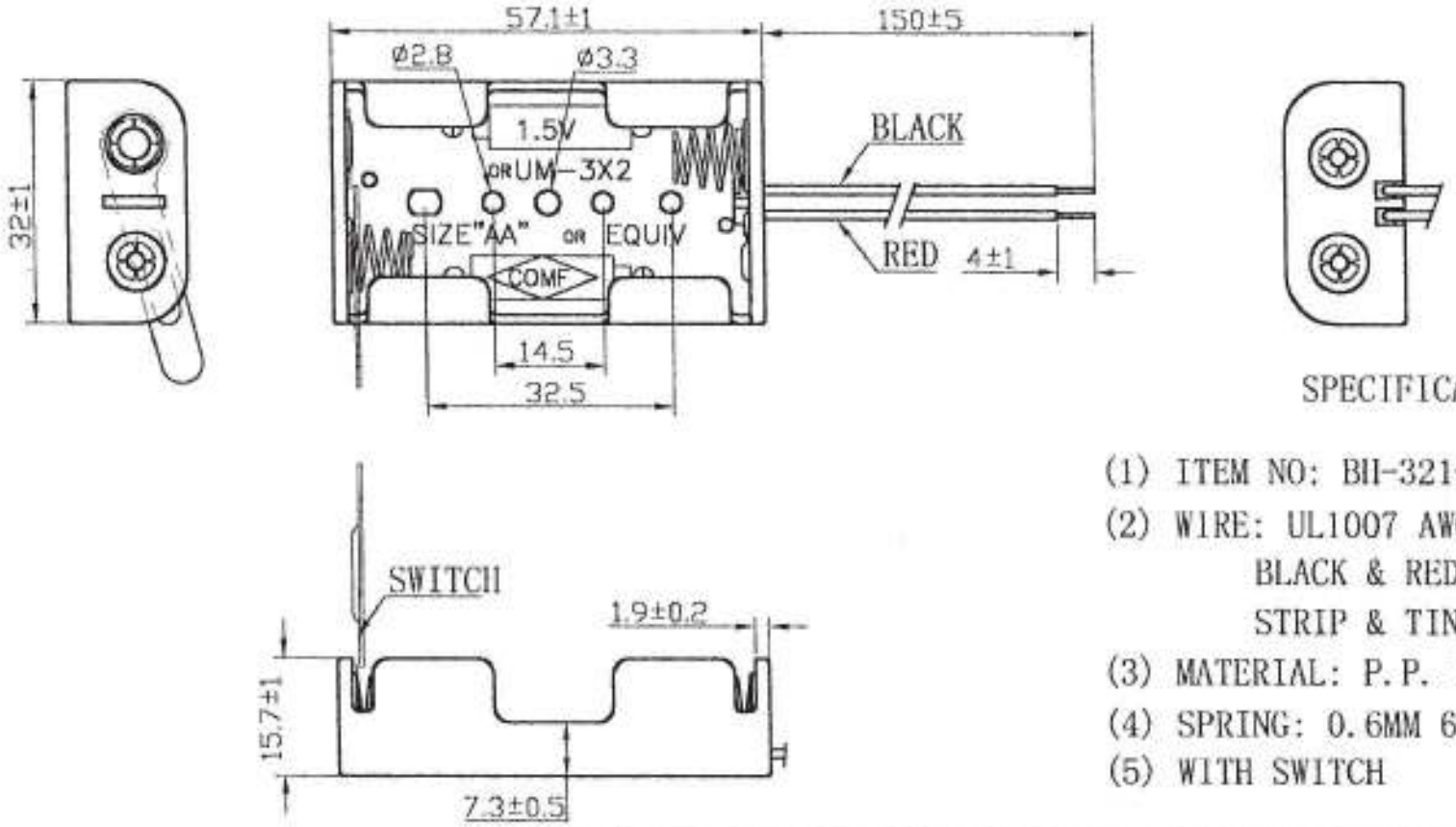

SPECIFICATION

(1) ITEM NO: BH-321-1AS
(2) WIRE: UL1007 AWG#26
BLACK & RED 150MM±5MM
STRIP & TIN 4MM±1MM
(3) MATERIAL: P.P. RESIN, BLACK COLOR
(4) SPRING: 0.6MM 65C SPRING WIRE
(5) WITH SWITCH

NO.	MODIFICATION	DATE
3		
2		
1	底部原方孔改为圆孔	9/10

THIRD ANGLE PROJETION

NAME	BATTERY HOLDER BH-321-1AS		
SCALE	1:1	APPD	zhu qiaoLing
UNIT	MM	CHKD	9/24
MAT'L	P.P.	DWN	LIHAIPING
DATE	SEP. 24. 2003	DR NO	3211AS-0903