No.	DATE	DESCRIPTION	REV
1	2013. 02. 27	Drawing to renew 圖面更新	A

REMARK : RoHS REQUIREMENT APPLIED
(符合RoHS)

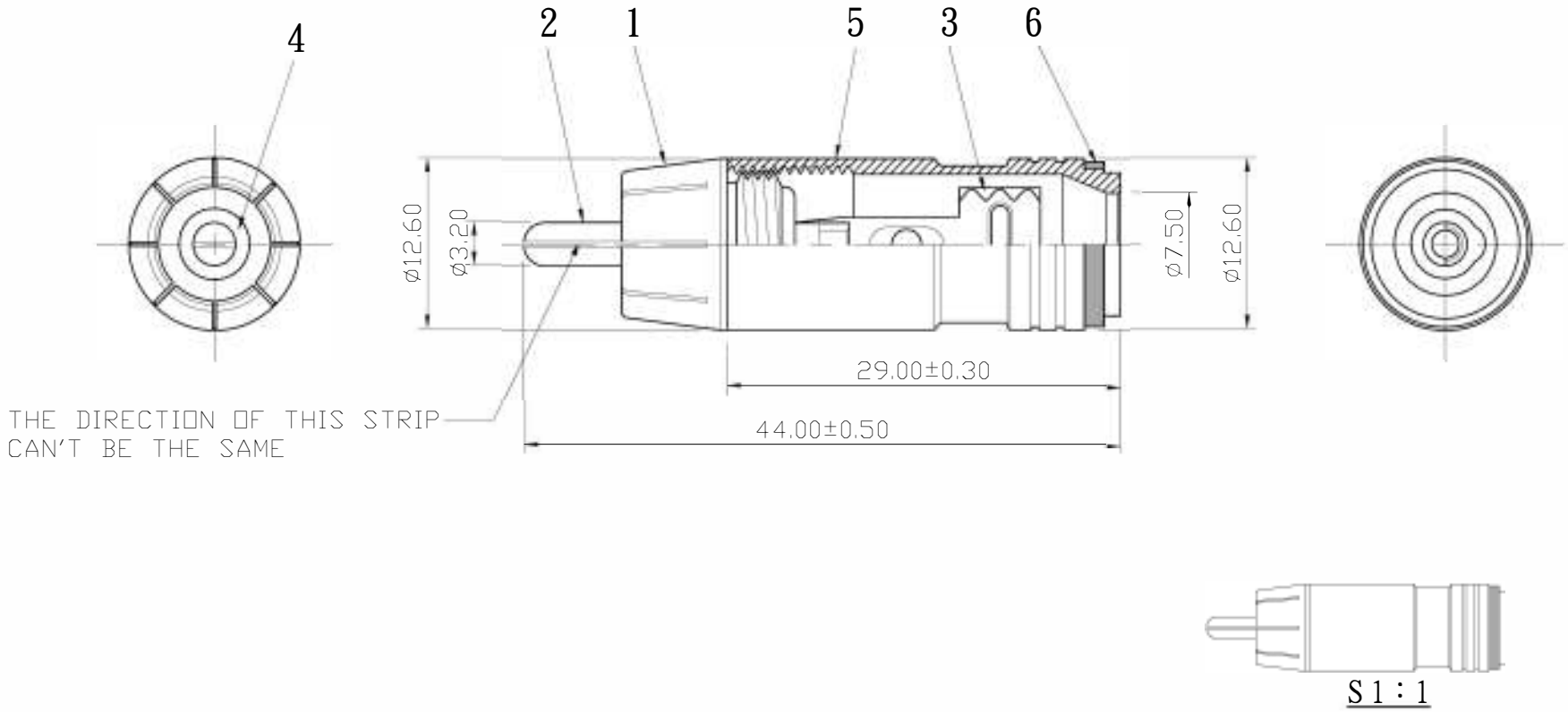

NO.	Description	Unit	Materials	Finish	Drawing No.
7					
6	color ring	1	aluminum	blue/red/gold/silver anodic treatment	
5	shell	1	brass	zinc alloy	
4	insulator	1	PTFE	white	
3	clip	1	brass	gold	
2	contact pin	1	brass	gold	
1	body	1	brass	gold	

DIMENSIONS ARE IN MILLIMETERS

UNLESS OTHRWISE PECIFIED TOLERANCES
(一般公差)
0.5~6 = ±0.2
>6~30 = ±0.4
>30~120 = ±0.6
>120~315 = ±1
>315~1000 = ±1.6
ANGLES(角度) = ±5°

SCALE 2 : 1 | UNIT MM

CHECKED

DRAWN *Tina*

DATE 2011. 01. 27

TITLE RCA PLUG

DRAWING NO. RP-1141ZAG-B-RED

FILE NO. DRAWING\AUDIO\RP\RP-1141ZAG-TEF-A-BE/RD/G/S-7.5